HDMI Port ESD Protection
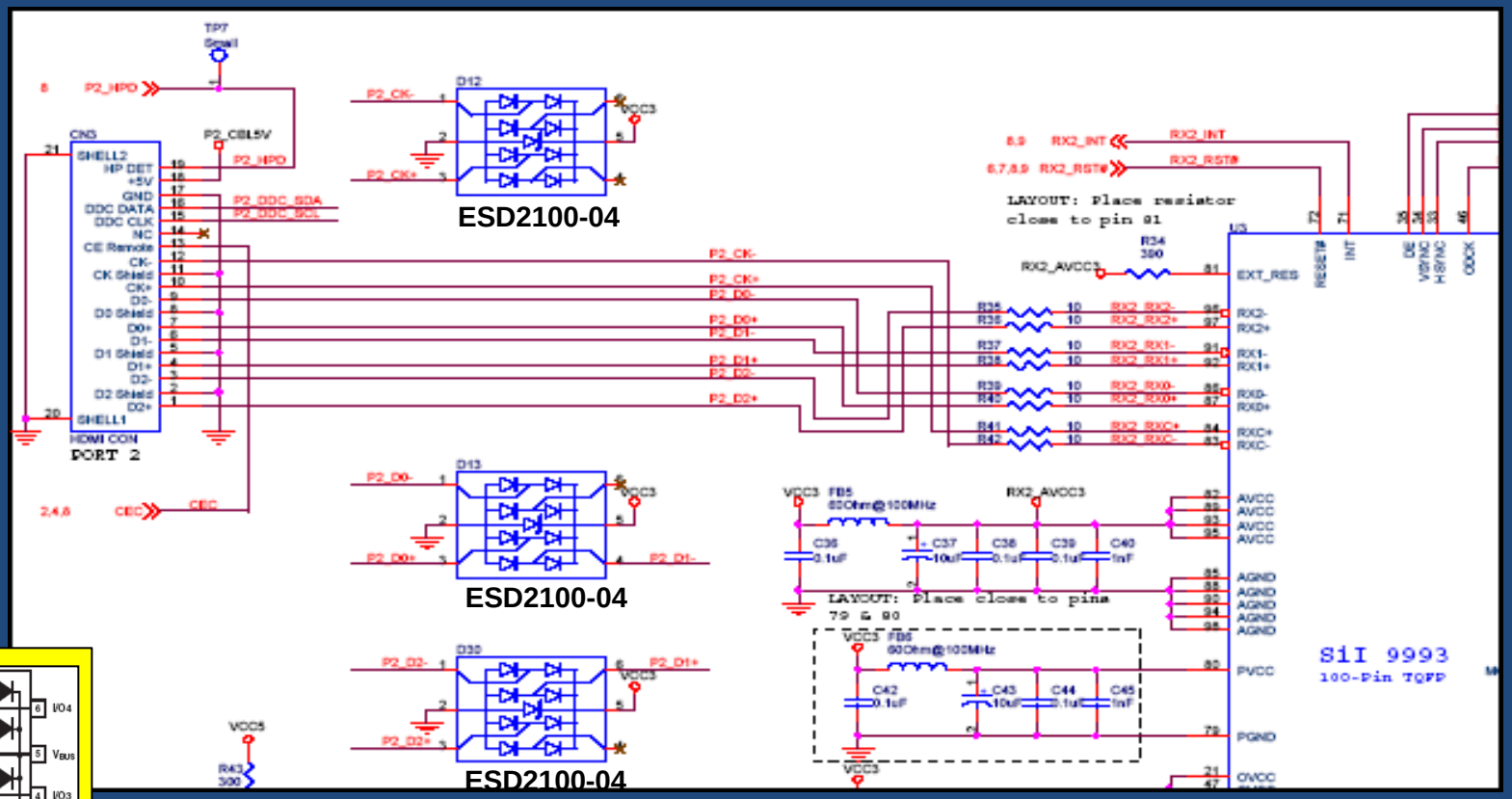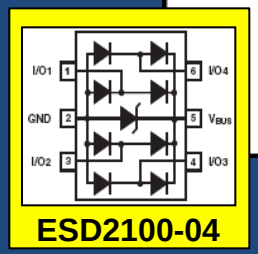
Application Schematic for ESD2100